CTN Test Report 92-017

AFTB-ID 92-021

Technical Publication Transfer Test Using Resource Data Consultants

MIL-R-28002 (Raster)

Quick Short Test Report

20 November 1992

DISTRIBUTION STATEMENT A
Approved for public release;
Distribution Unlimited

Prepared for

Air Force Materiel Command

DTIC QUALITY INSPECTED 3

19960822 223

DISCLAIMER NOTICE

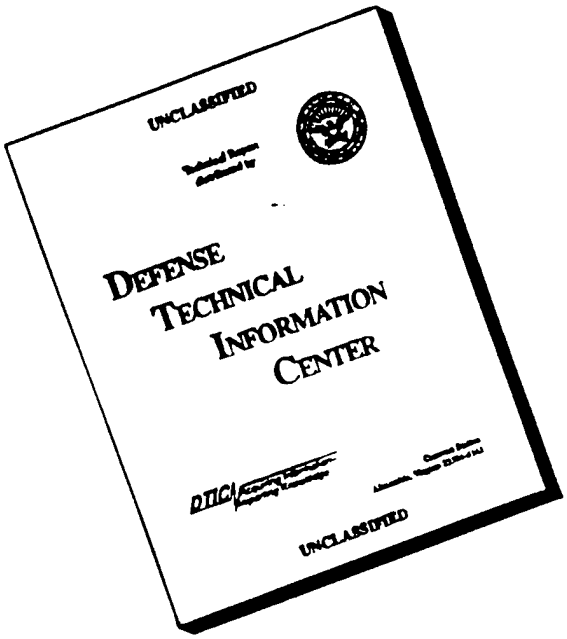

THIS DOCUMENT IS BEST QUALITY AVAILABLE. THE COPY FURNISHED TO DTIC CONTAINED A SIGNIFICANT NUMBER OF PAGES WHICH DO NOT REPRODUCE LEGIBLY.

CTN Test Report
92-017

AFTB-ID-92-21

Technical Publication Transfer

Using Resource Data Consultants

MIL-R-28002 (Raster)

Quick Short Test Report

20 November 1992

Prepared By
Air Force CALS Test Bed
Wright-Patterson AFB, OH 45433

AFTB Contact
Gary Lammers
(513) 427-2295

CTN Contact
Mel Lammers
(513) 427-2295

DTIC QUALITY INSPECTED 3

DISCLAIMER

This document was prepared as an account of work sponsored by the Air Force. Neither the United States Government or any warranty, express or implied, or assumes any legal liability or responsibility for the accuracy, completeness, or usefulness of any information, apparatus, product, or process disclosed, or represents that its use would not infringe privately own rights. Reference herein to any specific commercial products, process, or service by trade name, trademark, manufacturer, or otherwise, does not necessarily constitute or imply its endorsement, recommendation, or favoring by the United States Government or the Air Force. The views and opinions of authors expressed herein do not necessarily state or reflect those of the United States Government or the Air Force, and shall not be used for advertising or product endorsement purposes.

Available to the public from the
National Technical Information Service
U.S. Department of Commerce
5285 Port Royal Rd.,
Springfield, VA 22161

This report and those involved in its preparation do not endorse any product, process, or company stated herein. Use of these means by anyone does not imply certification by the CALS Test Network (CTN).

Contents

1. Introduction....1
1.1. Background....1
1.2. Purpose....2
2. Test Parameters....3
3. 1840A Analysis....5
3.1. External Packaging....5
3.2. Transmission Envelope....5
3.2.1. Tape Formats....5
3.2.2. Declaration and Header Fields....5
4. IGES Analysis....6
5. SGML Analysis....6
6. Raster Analysis....6
7. CGM Analysis....6
8. Conclusions and Recommendations....7
9. Appendix A - Tape Tool Report Logs....8
9.1. Tape Catalog....8
9.2. Tape Evaluation Log....9
9.3. Tape File Set Validation Log....13
10. Appendix B - Raster Files....15
10.1. Preview....15
10.1.1. D001R001....15
10.1.2. D001R002....17
10.1.3. D001R003....19
10.1.4. D001R004....21

10.1.5. D001R004 - Detail.....23

10.1.6. D001R005.....25

10.2. HiJaak/Ventura.....27

10.2.1. D001R001.....27

10.2.2. D001R002.....29

10.2.3. D001R003.....31

10.2.4. D001R004.....33

10.2.5. D001R005.....35

1. Introduction

1.1 Background

The DoD Computer-aided Acquisition and Logistics Support (CALS) Test Network (CTN) is conducting tests of the military standard for the Automated Interchange of Technical Information, MIL-STD-1840A, and its companion suite of military specifications. The CTN is a DoD-sponsored confederation of voluntary participants from industry and government managed by the Air Force Material Command.

The primary objective of the CTN is to evaluate the effectiveness of the CALS standards for technical data interchange and to demonstrate the technical capabilities and operational suitability of those standards. Two general categories of tests are performed to evaluate the standards, formal and informal. Formal tests are large, comprehensive tests that follow a written test plan, require specific authorization from DoD, and may take months to prepare, execute, and report.

Informal tests are used by the CTN technical staff to broaden the testing base by including representative samples of the many systems and applications used by CTN participants. They also allow the CTN staff to gain feedback from many industry and government interpretations of the standards, to increase the base of participation in the CALS initiative, and to respond, in a timely manner, to the many requests for help that come from participants. Participants take part voluntarily and are benefited by receiving an evaluation of their latest implementation (interpretation) of the standards, interacting with the CTN technical staff, gaining experience in use of the standards, and developing increased confidence in them. The results of informal tests are reported in Quick Short Test Reports (QSTRs) that briefly summarize the standard(s) tested, the hardware and software used, the nature of the test, and the results.

1.2 Purpose

The purpose of the informal test reported in this QSTR was to analyze **Resource Data Consultants' (REDCONs)** interpretation and use of the CALS Standards in transferring technical publications data. REDCON used its CALS Technical Data Interchange System to produce data in accordance with the standards and delivered it to the CTN technical staff on a 9-track magnetic tape.

2. Test Parameters

Test Plan: AFTB 92-21

Date of Evaluation: 20 March 1992

Evaluator:
George Elwood
Air Force CALS Test Bed
AFMC/ENCT
4027 Colonel Glenn Hwy
Suite 200
Dayton, OH 45431-1601

Data Originator:
Resource Data Consultants
Alvin R. Miles
655 E. Medical Dr.
Suite 150
Bountiful, UT 84010

Data Description: Technical Manual Test
1 document declaration file
5 Raster files

Data Source System:

Raster

HARDWARE
Xerox K5200
Context Ideal FSS 4016t
MacIntosh LC
QualStar 1054 Tape Drive

SOFTWARE
HiJaak
REDCON

Evaluation Tools Used:

MIL-STD-1840A (TAPE)
SUN 3/280
CTN Tapetools (v1.2.8) UNIX
Agfa Compugraphics CALS v40.4
Cheetah Gold 486

USLynx 1840A Tape Handler
CTN Tapetools (v1.2.8) DOS

MIL-R-28002 (Raster)

SUN 3/60
- CTN Raster Tools
- AGFA Compugraphics
- Rosetta Technology Preview V3.1

Cheetah
- Inset Systems HiJaak V2.02
- SPC Harvard Graphics V3.0
- Xerox Ventura Publisher

Standards Tested:

MIL-STD-1840A
MIL-R-28002

3. 1840A Analysis

3.1 External Packaging

The tape arrived at the Air Force Test Bed enclosed in a box IAW ASTM D 3951. The exterior of the box was marked with the magnetic media warning label, MIL-STD-1840A, para. 5.3.1.3.

The tape was enclosed in a barrier bag as required by MIL-STD-1840A, para. 5.3.1.2. Inspection of the tape reel showed the required label indicating the recording density as required by MIL-STD-1840A, para. 5.3.1. Enclosed in the box was a packing list showing all files that were recorded on the tape.

3.2 Transmission Envelope

The 9-track tape received by the Air Force Test Bed contained MIL-STD-1840A files. The files were named per the standard conventions.

3.2.1 Tape Formats

The 1840A Tape was run through the AFTB TAPETOOL utility version 1.2.8. No errors were encountered while evaluating the contents of the tape labels.

A note was reported on the tape label version. MIL-STD-1840A permits the use of both versions three and four. The use of the most current standard should be used and noted.

The tape was also read using Agfa CAPS/CALS *read1840A* tape utility. No problems were reported. The PC version of *TAPETOOL* was also used without problem. As a last check_the US Lynx *calstape* utility was used and no errors were encountered.

3.2.2 Declaration and Header Fields

No errors were reported in the Document Declaration File or the data header records.

4. IGES Analysis

No IGES files were included on the tape.

5. SGML Analysis

No SGML files were included on the tape.

6. Raster Analysis

All five raster images were checked using the CTN *validg4* utility. No errors were reported by this utility.

The files were converted using Rosetta Technologies *Prepare* and viewed using *Preview.* No problems were encountered. Hard copies of the Preview output are included in the appendix to this report. It was noted that file D001R002 contained a fair amount of orphan pixels. These were also noted on the provided copy of this file. A blowup was created of file D001R004 to show the available detail in the file.

The files were then converted using Inset Systems *HiJaak* without problem. The PCX output was checked and with the exception of the orphan pixels in file D001R002, they were all very clean and readable. The files were converted from a PCX format to IMG format using Xerox *Ventura Publisher.* No problems were encountered and the resulting hard copy is included in the appendix to this report.

The raster files included on this tape met current CALS MIL-R-28002 standards.

7. CGM Analysis

No CGM files were included on the tape.

8. Conclusions and Recommendations

In summary,the MIL-STD-1840A tape from Resource Data Consultants was correct. The tape could be read properly using the CTN *TAPETOOL* and the other MIL-STD-1840A tape reading utilities available in the AFTB without problem. No problems were reported by any of the tape utilities available in the Air Force CALS Test Bed.

All five raster images were evaluated and found to meet the current standards. They were converted, displayed and hard copies made without reported problems.

The tape provided by Resource Data Consultants appears to meet the current CALS standards which were evaluated.

9. Appendix A - Tape Tool Report Logs

9.1 Tape Catalog

```
CALS Test Network Catalog Evaluation - Version 1.2; Release Number 8

  Standards referenced:
    MIL-STD-1840A (1987) - Automated Interchange of Technical Information
    ANSI X3.27 (1987) - File Structure and Labelling of Magnetic Tapes
                        for Information Interchange
    ANSI X3.4 (1986) - Coded Character Sets - 7 Bit ASCII

Fri Mar 20 09:55:42 1992

MIL-STD-1840A File Catalog

File Set Directory: C:\TAPETOOL\SET004

                                                                    Page: 1

                                                  Record
                                                  Format/    Block      Selected/
File Name                File Type                Length /Total  Extracted
-----------------------------------------------------------------------------
D001                     Document Declaration     D/00260 02048/000001  Extracted
D001R001                 Raster                   F/00128 02048/000042  Extracted
D001R002                 Raster                   F/00128 02048/000070  Extracted
D001R003                 Raster                   F/00128 02048/000044  Extracted
D001R004                 Raster                   F/00128 02048/000134  Extracted
D001R005                 Raster                   F/00128 02048/000063  Extracted

Catalog Process terminated normally.
```

9.2 Tape Evaluation Log

```
CALS Test Network Tape Evaluation - Version 1.2; Release Number 8
  Standards referenced:
    ANSI X3.27 (1987) - File Structure and Labelling of Magnetic Tapes
                        for Information Interchange
    ANSI X3.4 (1986) - Coded Character Sets - 7 Bit ASCII

Fri Mar 20 09:54:53 1992

ANSI Tape Import Log

Rewinding tape to load point...

VOL1CTN1                              REDCON                                3

  Label Identifier: VOL1
  Volume Identifier: CTN1
  Volume Accessibility:
  Owner Identifier: REDCON
  Label Standard Version: 3

*** NOTE  (ANSI X3.27; 8.3.1.8) - The Label Standard Version
    should be 4 to represent the current level of ANSI X3.27.

HDR1D001             CTN1  00010001000100********** 000000QuTape 1.65

  Label Identifier: HDR1
  File Identifier: D001
  File Set Identifier: CTN1
  File Section Number: 0001
  File Sequence Number: 0001
  Generation Number: 0001
  Generation Version Number: 00
  Creation Date: ******
  Expiration Date: ******
  File Accessibility:
  Block Count: 000000
  Implementation Identifier: QuTape 1.65

HDR2D0204800260                       B           00

  Label Identifier: HDR2
  Recording Format: D
  Block Length: 02048
```

Record Length: 00260
Offset Length: 00

********** Tape Mark **********

Actual Block Size Found = 2048 Bytes.

Number of data blocks read = 1.

********** Tape Mark **********

EOF1D001 CTN1 000100010001000********** 000001QuTape 1.65

Label Identifier: EOF1
File Identifier: D001
File Set Identifier: CTN1
File Section Number: 0001
File Sequence Number: 0001
Generation Number: 0001
Generation Version Number: 00
Creation Date: ******
Expiration Date: ******
File Accessibility:
Block Count: 000001
Implementation Identifier: QuTape 1.65

EOF2D0204800260 B 00

Label Identifier: EOF2
Recording Format: D
Block Length: 02048
Record Length: 00260
Offset Length: 00

********** Tape Mark **********

HDR1D001R001 CTN1 000100020001000********** 000000QuTape 1.65

Label Identifier: HDR1
File Identifier: D001R001
File Set Identifier: CTN1
File Section Number: 0001
File Sequence Number: 0002
Generation Number: 0001
Generation Version Number: 00
Creation Date: ******

```
  Expiration Date: ******
  File Accessibility:
  Block Count: 000000
  Implementation Identifier: QuTape 1.65

HDR2F0204800128                    M B          00

  Label Identifier: HDR2
  Recording Format: F
  Block Length: 02048
  Record Length: 00128
  Offset Length: 00

************ Tape Mark ***************

  Actual Block Size Found = 2048 Bytes.

  Number of data blocks read = 42.

************ Tape Mark ***************

EOF1D001R001         CTN1  000100020001000************ 000042QuTape 1.65

  Label Identifier: EOF1
  File Identifier: D001R001
  File Set Identifier: CTN1
  File Section Number: 0001
  File Sequence Number: 0002
  Generation Number: 0001
  Generation Version Number: 00
  Creation Date: ******
  Expiration Date: ******
  File Accessibility:
  Block Count: 000042
  Implementation Identifier: QuTape 1.65

EOF2F0204800128                    M B          00

  Label Identifier: EOF2
  Recording Format: F
  Block Length: 02048
  Record Length: 00128
  Offset Length: 00
```

<<<<< *PART OF LOG REMOVED HERE* >>>>>

```
############ End of Volume CTN1   ###############

############ End Of Tape File Set ###############

Rewinding tape to load point...

Tape Import Process terminated with 0 error(s), 0 warning(s),
and 1 note(s).
```

9.3 Tape File Set Validation Log

```
CALS Test Network File Set Evaluation - Version 1.2; Release Number 8
  Standards referenced:
    MIL-STD-1840A (1987) - Automated Interchange of Technical Information
    MIL-R-28002 (1989) - Raster Graphics Representation In Binary
                         Format, Requirements For

Mon Mar 23 07:29:10 1992

MIL-STD-1840A File Set Evaluation Log

File Set: SET005

Found file: D001
Extracting Document Declaration Header Records...
Evaluating Document Declaration Header Records...

srcsys: REDCON  655 E. Medical Drive, Bountiful, UT 84010
srcdocid: NONE
srcrelid: NONE
chglvl: ORIGINAL
dteisu: 19920320
dstsys: ATOS System, Hill Air Force Base, UT 84056
dstdocid: NONE
dstrelid: NONE
dtetrn: 19920320
dlvacc: NONE
filcnt: R5
ttlcls: Unclass
doccls: Unclass
doctyp: NONE
docttl: NONE
```

```
Found file: D001R001
Extracting Raster Header Records...
Evaluating Raster Header Records...

srcdocid: NONE
dstdocid: NONE
txtfilid: NONE
figid: NONE
srcgph: NONE
doccls: NONE
rtype: 1
rorient: 000,270
rpelcnt: 002840,003616
rdensty: 0400
notes: NONE

Saving Raster Header File: D001R001.HDR
Saving Raster Data File: D001R001.GR4
```

<<<<< *PART OF LOG REMOVED HERE* >>>>>

```
Evaluating numbering scheme...
No errors were encountered during numbering scheme evaluation.
Numbering scheme evaluation complete.

Checking file count...
No errors were encountered during file count verification.
File Count verification complete.

No errors were encountered in Document D001.

No errors were encountered in this File Set.

MIL-STD-1840A File Set Evaluation Complete.
```

10. Appendix B - Raster Files

10.1 Preview

10.1.1 D001R001

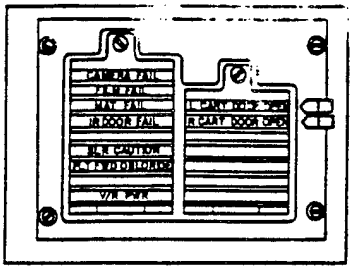

CAUTION LIGHTS PANEL

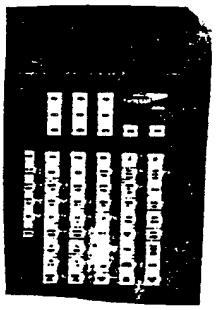

OD-772C1

NO. 1 CIRCUIT BREAKER PANEL

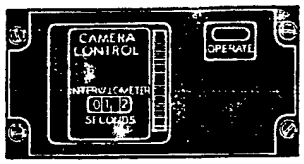

INTERVALOMETER PANEL

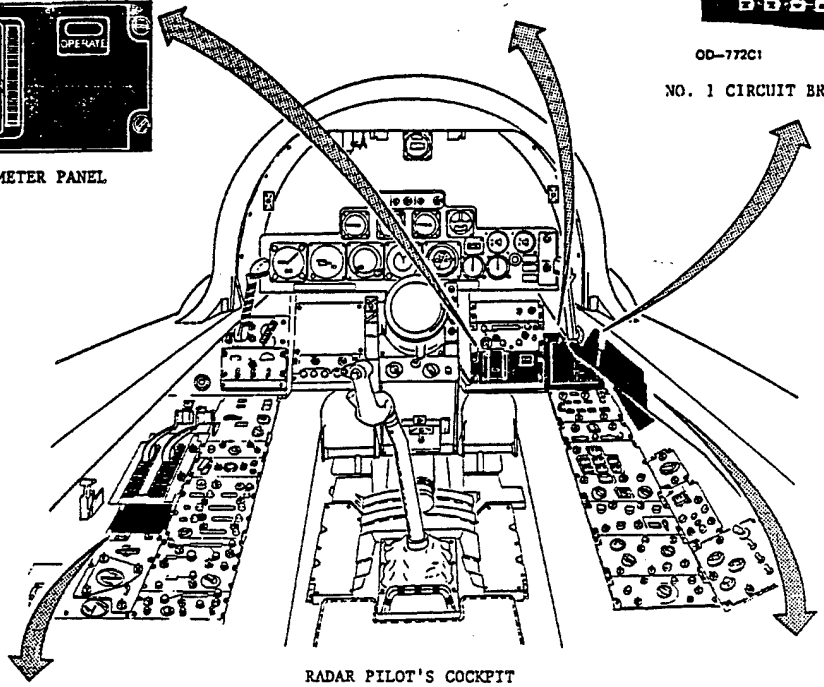

RADAR PILOT'S COCKPIT

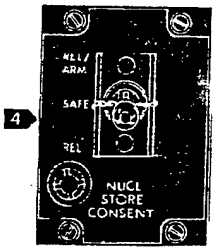

NUCLEAR STORE CONSENT
SWITCH PANEL

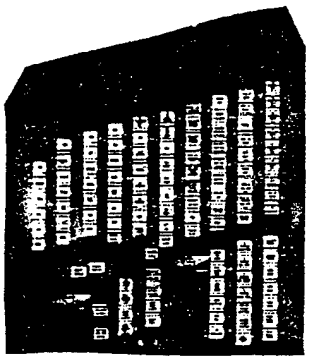

OD-772C2

NO. 2 CIRCUIT BREAKER PANEL

4(R)C-33-1-2-(24-4)

10.1.2 D001R002

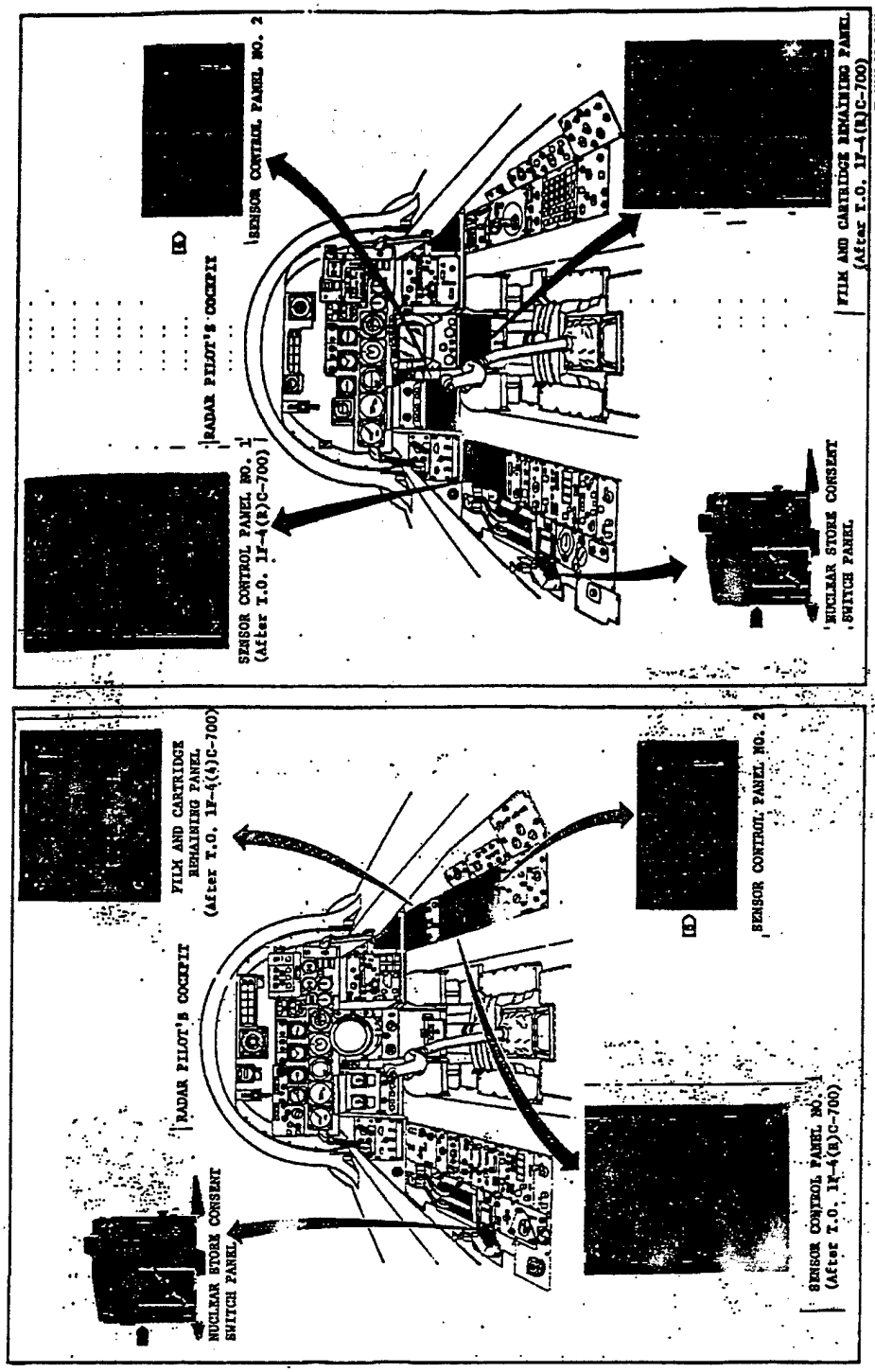

T.O. 1F-4(R)C-33-1-2

Figure 1-1. Armament Systems Panels, Controls and Indicator (Sheet 3 of 4)

1-8

10.1.3 D001R003

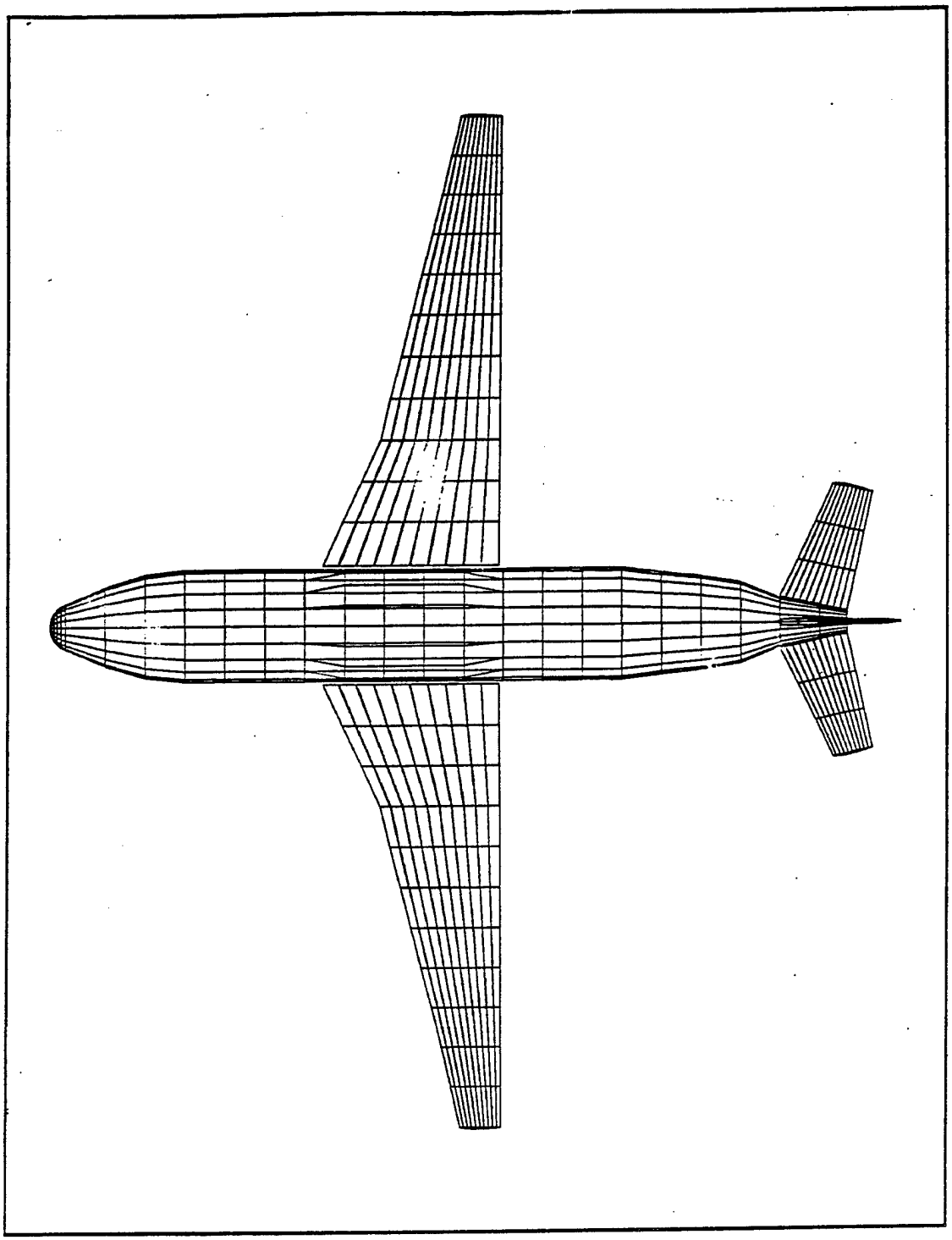

10.1.4 D001R004

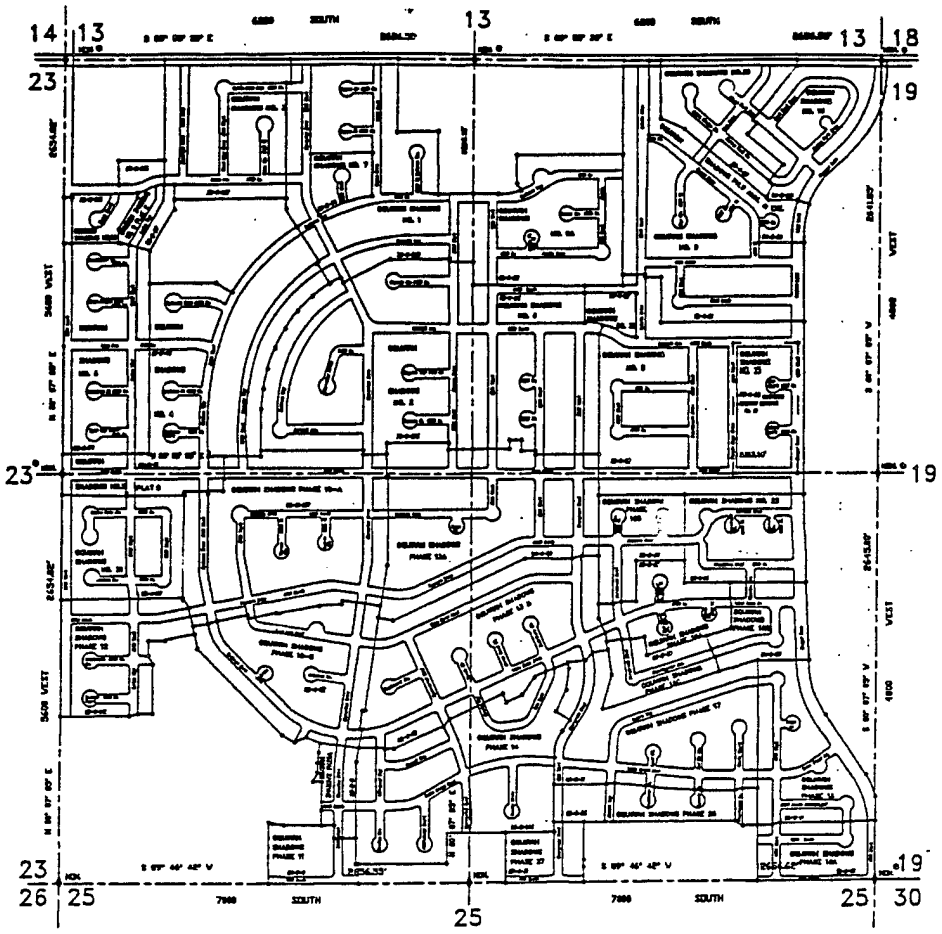

SEC 24

T2S R2W

AREA REFERENCE PLAT

COMPILED BY

DALE R. HOLT

SALT LAKE COUNTY SURVEYOR

N
W
E
S

24-T2S-R2W

24 T2S R2W

10.1.5 D001R004 - Detail

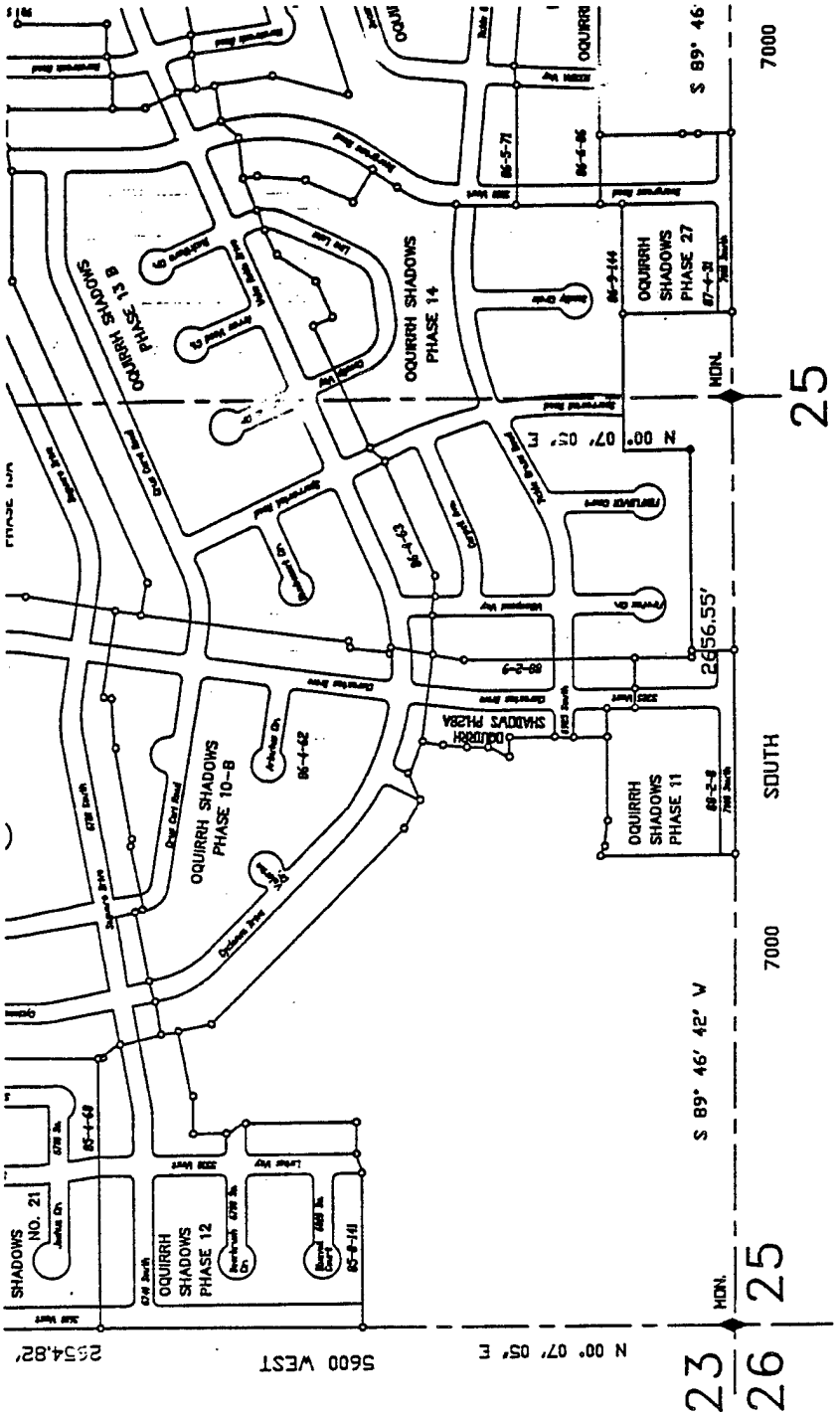
OQUIRRH SHADOWS PHASE 13 B
OQUIRRH SHADOWS PHASE 14
OQUIRRH SHADOWS PHASE 27
OQUIRRH SHADOWS PHASE 10-B
OQUIRRH SHADOWS PHASE 11
OQUIRRH SHADOWS PHASE 12
SHADOWS NO. 21
S 89° 46'
7000
MDN.
25
N 00° 07' 05" E
2656.55'
SOUTH
S 89° 46' 42" W
7000
MDN.
25
23
26
N 00° 07' 05" E
5600 WEST
2654.82'

10.1.6 D001R005

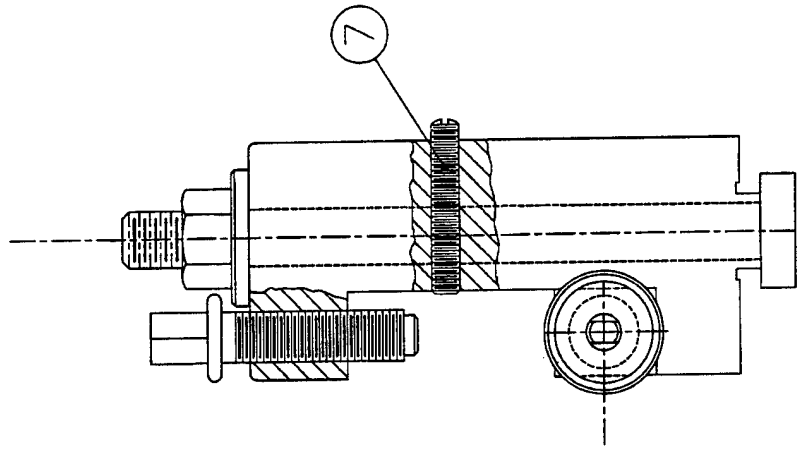
7

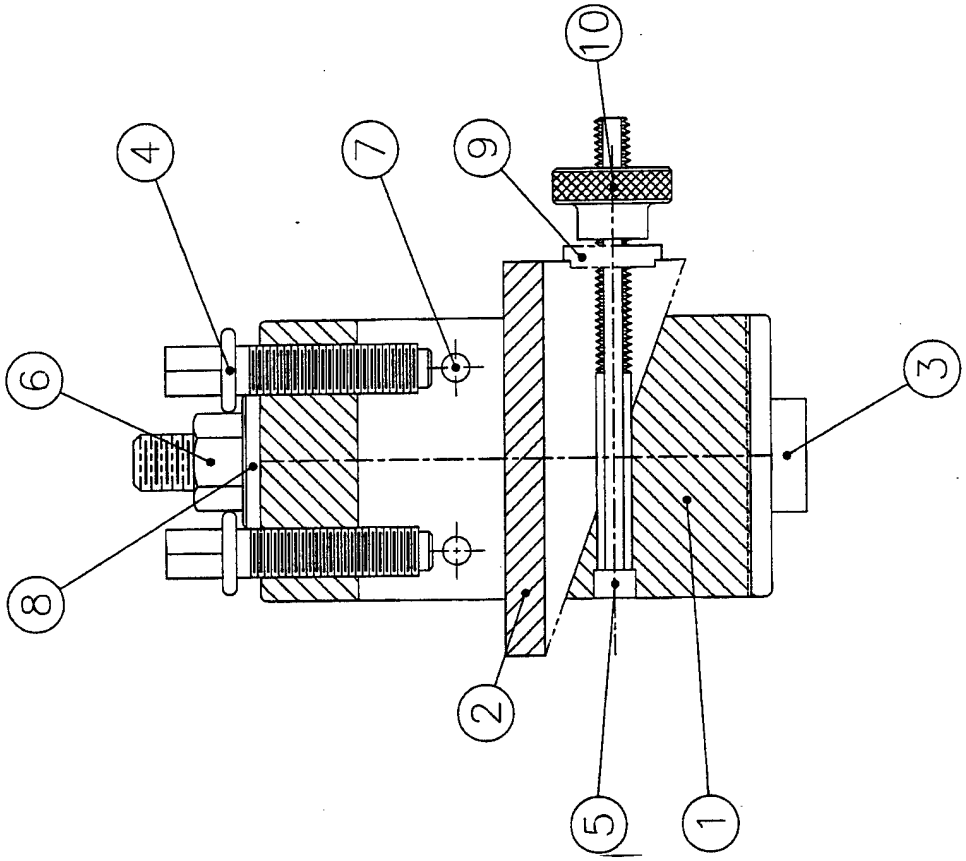
10
4
7
9
6
3
8
2
5
1

10.2 HiJaak/Ventura

10.2.1 D001R001

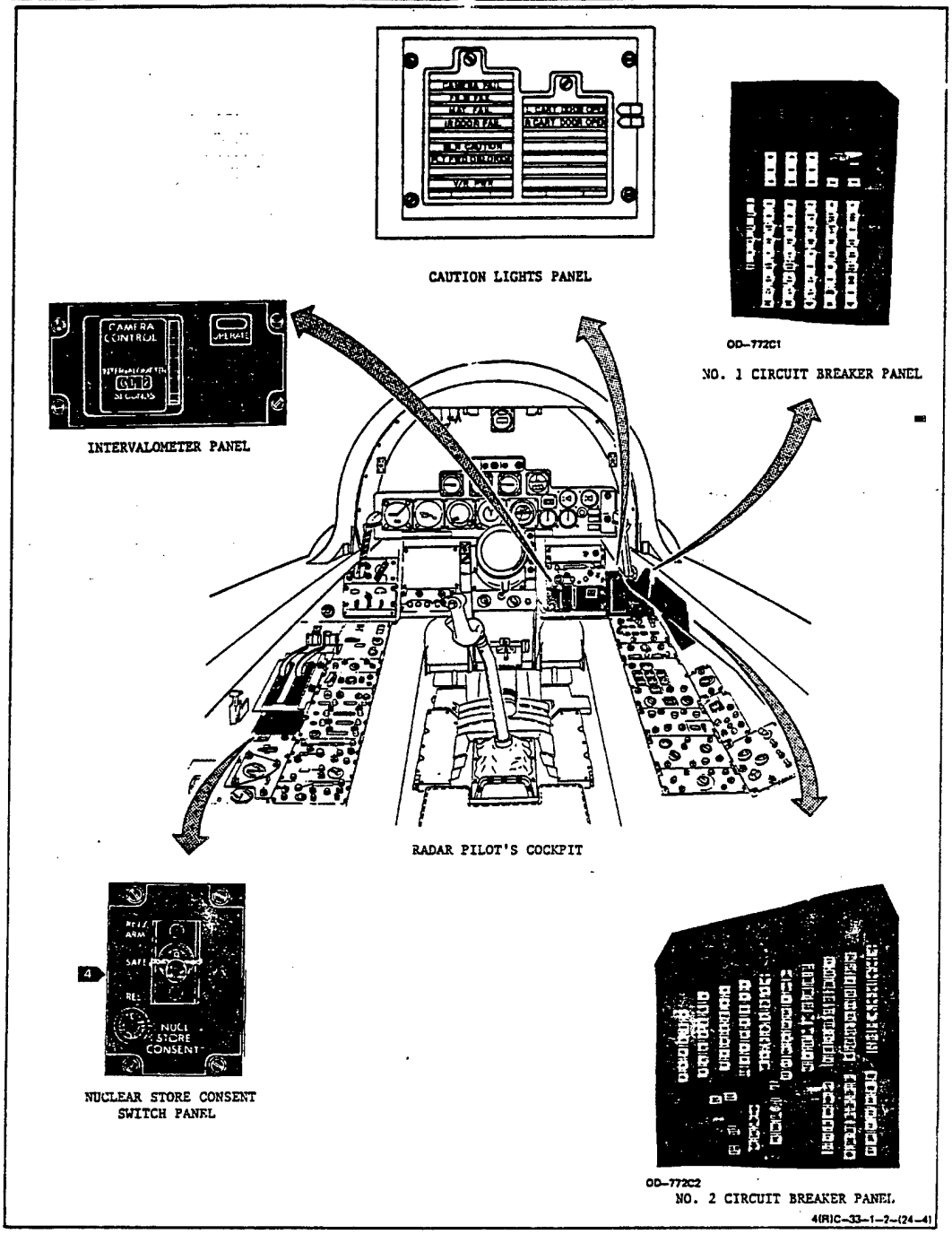
CAUTION LIGHTS PANEL
OD-772C1
NO. 1 CIRCUIT BREAKER PANEL
CAMERA CONTROL
INTERVALOMETER PANEL
RADAR PILOT'S COCKPIT
NUCL STORE CONSENT
NUCLEAR STORE CONSENT SWITCH PANEL
OD-772C2
NO. 2 CIRCUIT BREAKER PANEL
4(R)C-33-1-2-(24-4)

D001R001

10.2.2 D001R002

T.O. 1F-4(R)C-33-1-2

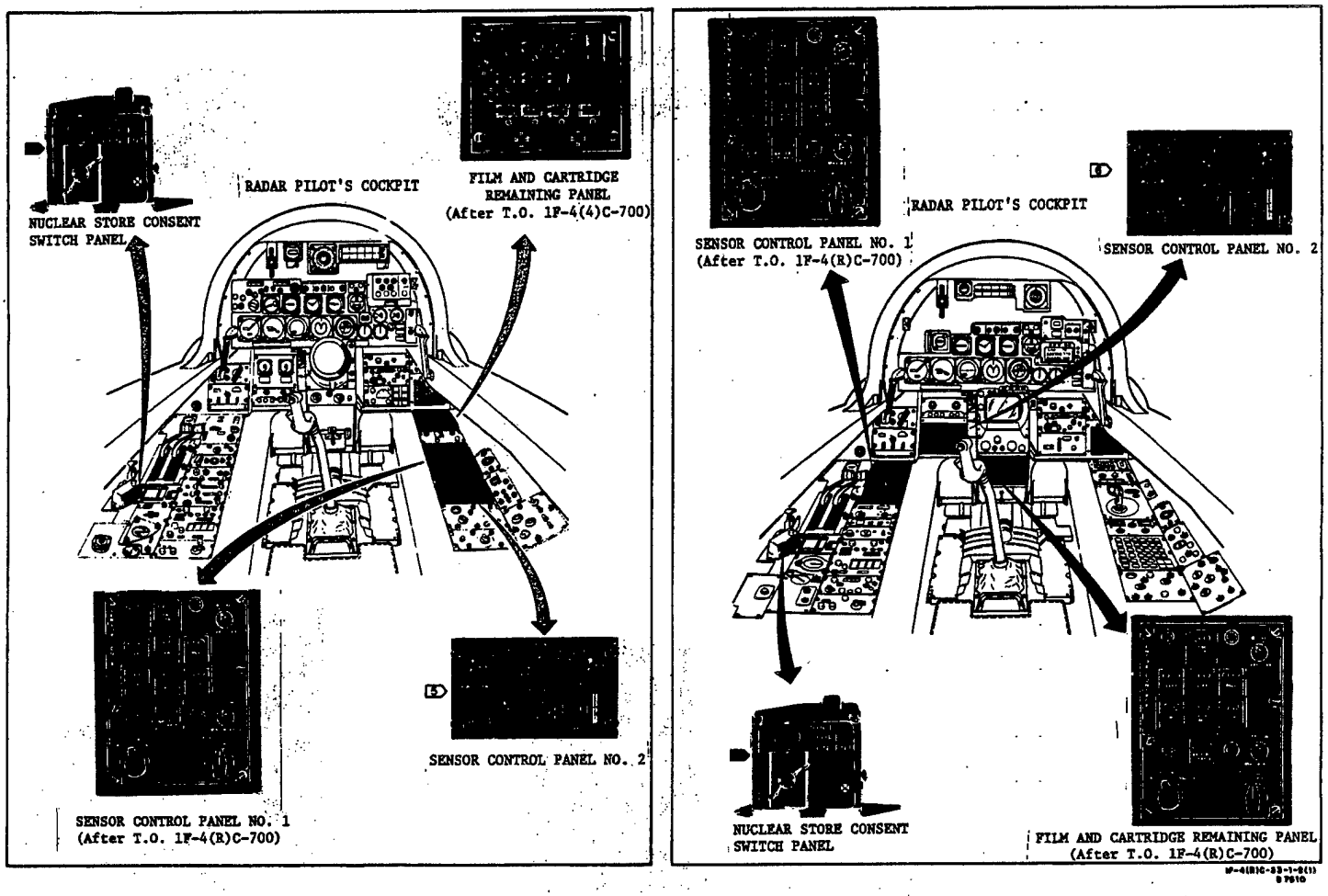

Figure 1-1. Armament Systems Panels, Controls and Indicator (Sheet 3 of 4)

1-8

10.2.3 D001R003

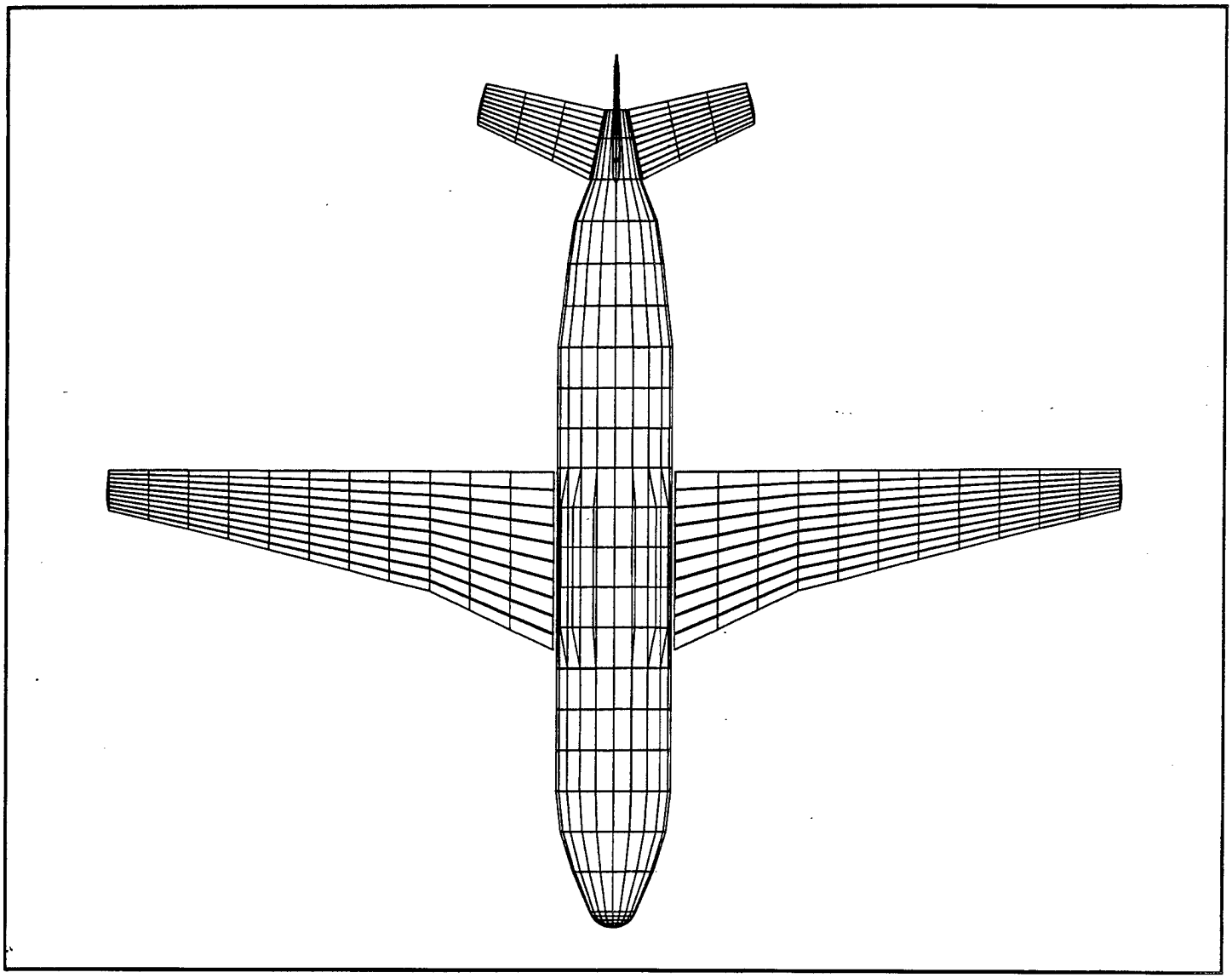

10.2.4 D001R004

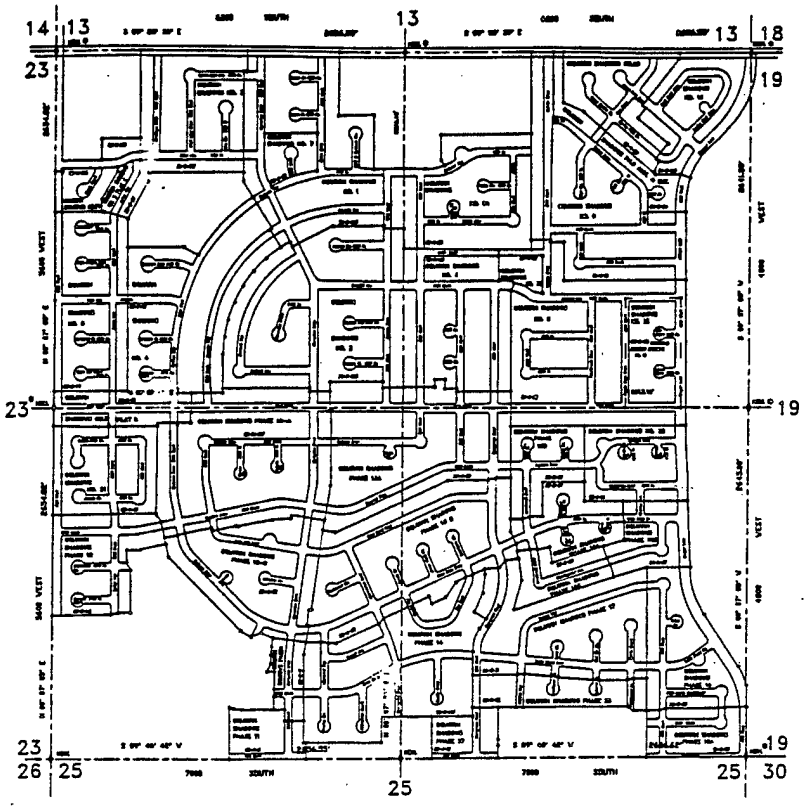

SEC 24
T2S R2W
AREA REFERENCE PLAT
COMPILED BY
DALE R. HOLT
SALT LAKE COUNTY SURVEYOR

N
W
E
S

24-T2S-R2W

24 T2S R2W

D001R004

10.2.5 D001R005

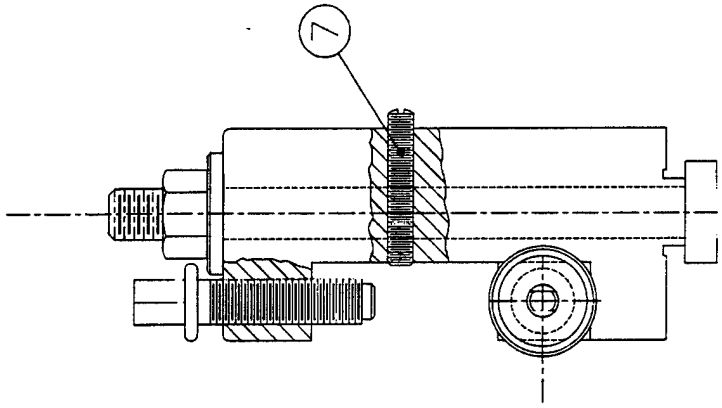
7

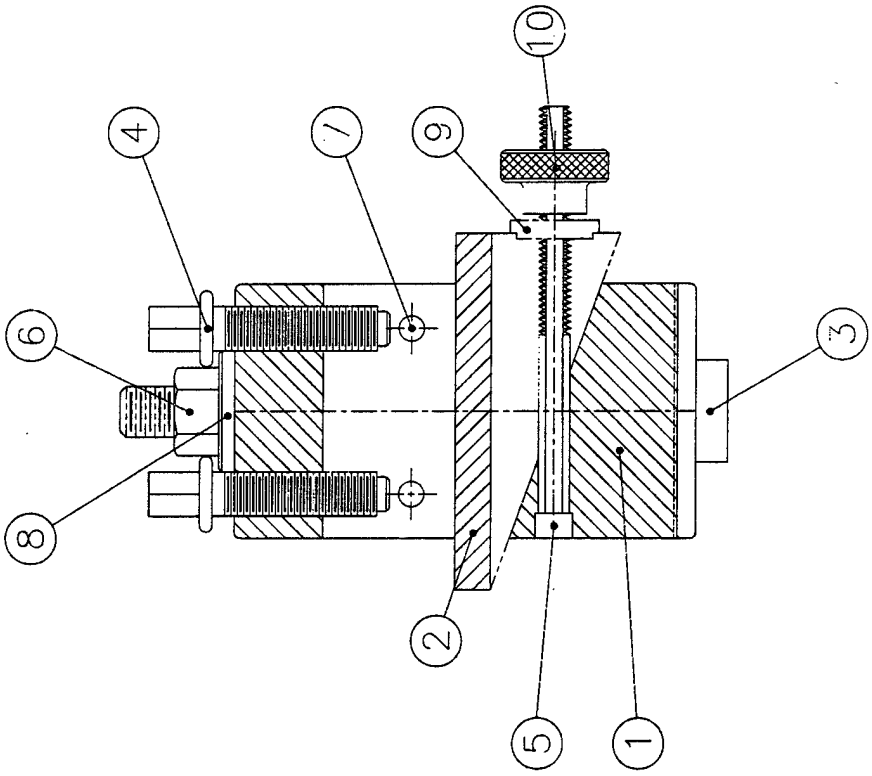
10
4
7
9
6
3
8
2
5
1